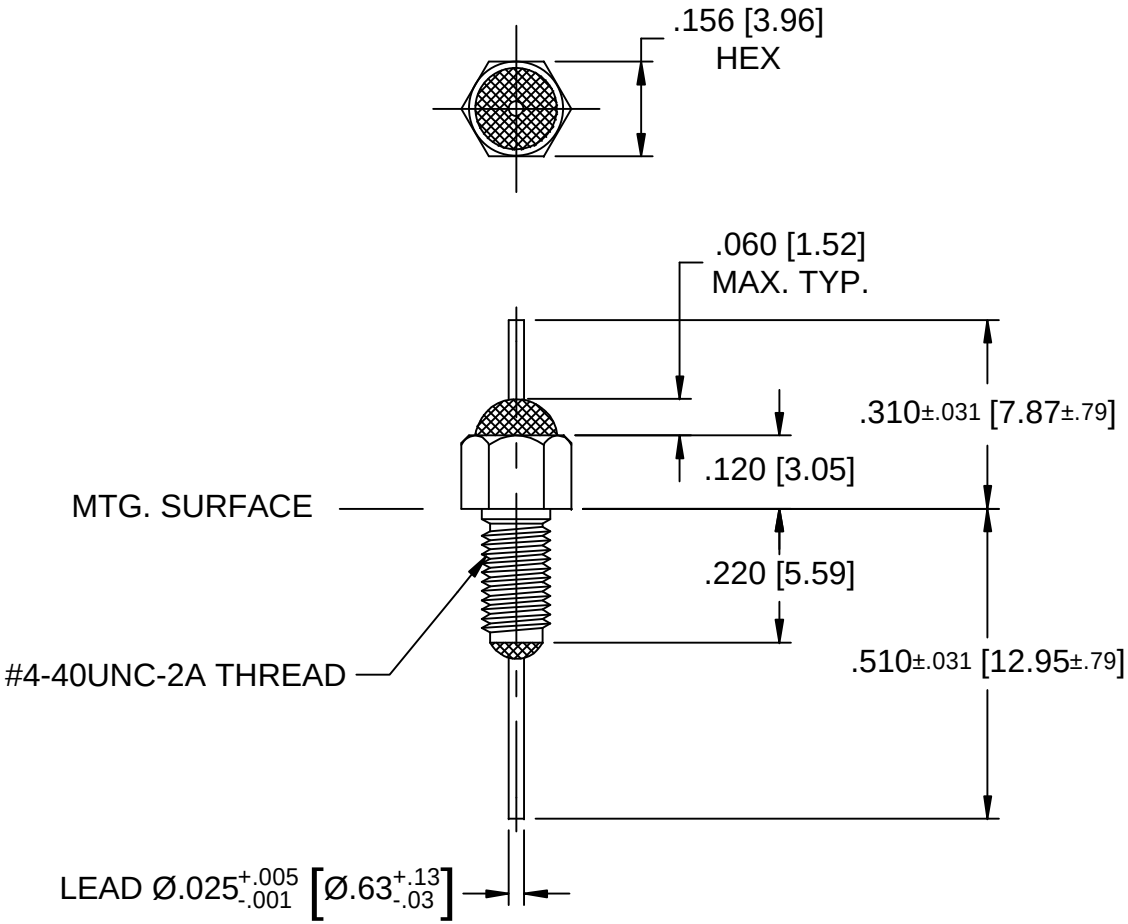

LEAD FINISH:	SILVER
BUSHING FINISH:	SILVER
CAPACITANCE	.050 uF MIN.
TEMP. RANGE	-55°C TO 125°C
CURRENT	10 AMP MAX.
WORKING VOLTAGE	100 VDC MAX.
D.C. RESISTANCE	.01 ohms MAX.
MIN. I.L. PER MIL-STD-220 AT 25°C NO LOAD	
FREQ. MHz	I.L. (db)
1	----
10	36
100	45
1 GHZ	70
SCHEMATIC	03

MARKING:
PART: SF023
BAG: 54F-790-023
DATE CODE
QTY. / BAG (200 MAX.)

RoHS COMPLIANT

NOTES:
1. MAXIMUM MOUNTING TORQUE: 1.5 LB-IN.
2. HARDWARE IS INCLUDED
3. THIS PRODUCT IS LEAD-FREE
4. MAX. REFLOW TEMP IS 245°C FOR 5 SECONDS.

REV. NO.	CHANGE NOTICE
03	CN 56299-CPD
02	CN 31564-CPD
01	CN 30522-CPD
00	CN 17414-CPD

TOLERANCES UNLESS OTHERWISE SPECIFIED
Dec. .x±
Dec. .xx±
Dec. .xxx± .010 [.254]
Angles ± 0° 30'

CODE IDENT. NO. 0LSP2

SPECTRUM CONTROL INC.

FAIRVIEW PENNSYLVANIA

Dwn. Hassett
Date 11-10-10
Engr R. STRUCHEN
Sheet 1 of 1

Description FEED THRU RESIN SEAL FILTER

54F-790-023